RSB-04D

Rack Shell Birch - 4 Space - 17.5" Rackable Depth

grundorf corp™
www.grundorf.com · (712)-322-3900

#	QTY	PART NUMBER	DESCRIPTION
1	2	41-004	RACK RAIL-4 SPACE
2	1	83-008	BADGE - GRUNDORF ORIGINAL

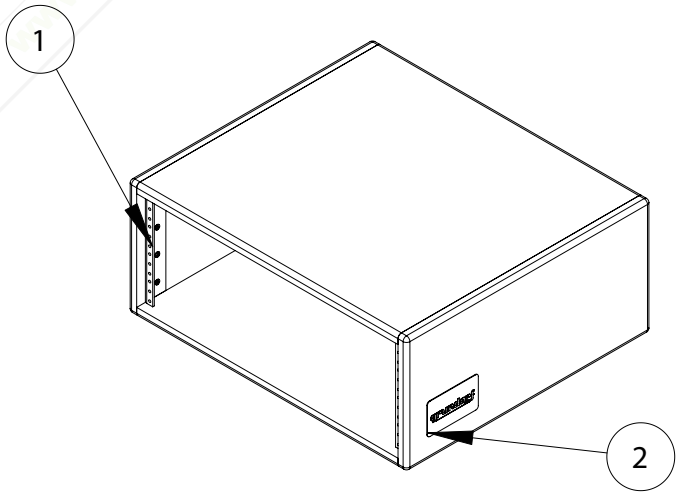

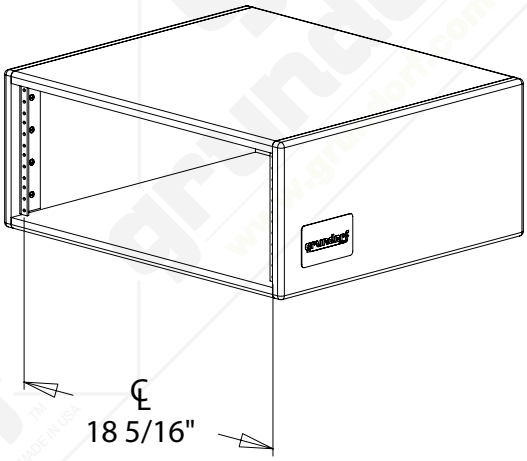

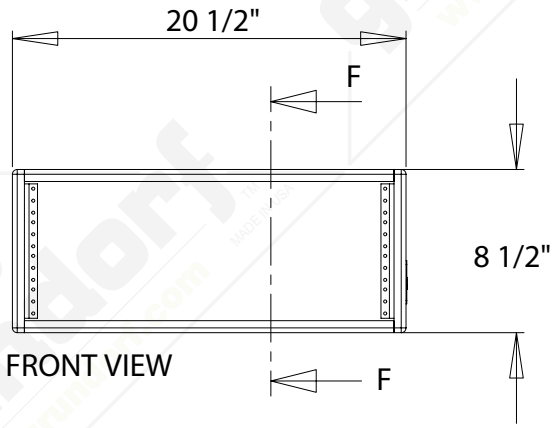

FRONT VIEW

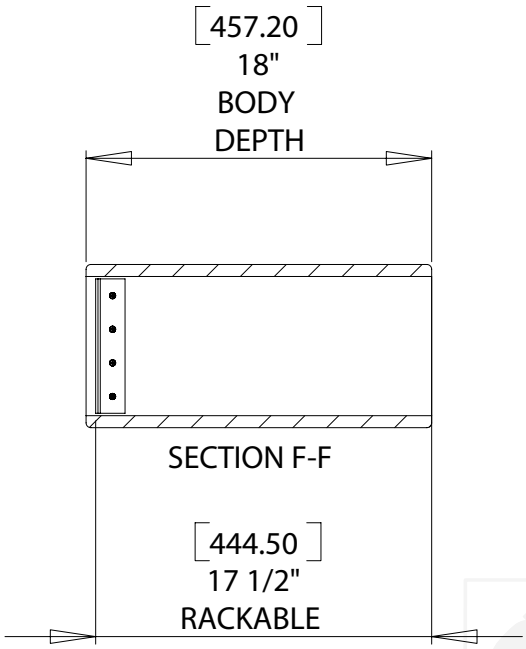

SECTION F-F

© 2008 GRUNDORF CORPORATION.
PROPRIETARY AND CONFIDENTIAL THE INFORMATION CONTAINED IN THIS DRAWING IS THE SOLE PROPERTY OF GRUNDORF CORPORATION.

8/19/2008